Current part is item (9) on diagram. Available at www.oshkoshequipment.com

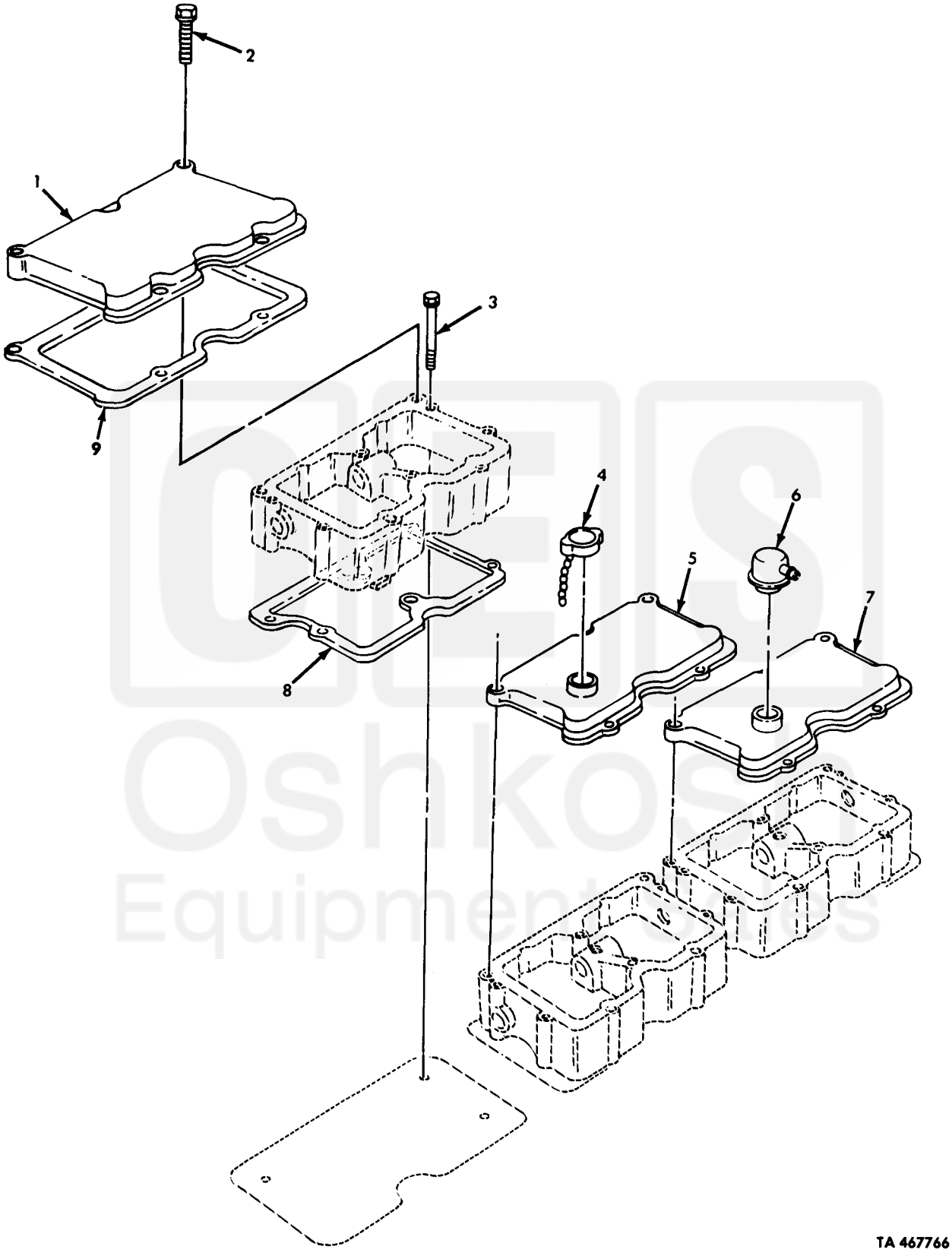

Figure 16. Rocker Lever Housing Covers and Breather.

Current part is item (9) on diagram. Available at www.oshkoshequipment.com

Current part is item (9) on diagram. Available at www.oshkoshequipment.com

(1) ILLUS. (a) FIG. NO.	(b) ITEM NO.	(2) SMR CODE	(3) NATIONAL STOCK NUMBER	(4) PART NUMBER	(5) FSCM	(6) DESCRIPTION USABLE ON CODE	(7) U/M	(8) QTY INC IN UNIT
						GROUP 0105 VALVES,CAMSHAFT,AND TIMING SYSTEM FIG.16 ROCKER LEVER HOUSING COVERS AND BREATHER		
16	1	PFFZZ	2815-01-146-1024	3006358	15434	COVER,FRONT	EA	1
16	2	PAFZZ	5305-01-118-8826	3006182	15434	SCREW,CAP,HEXAGON	EA	15
16	3	PAFZZ	5305-01-129-6901	3010589	15434	SCREW,ASSEMBLED WASHER	EA	18
16	4	PAOZZ	2805-00-421-9524	208045	15434	CAP,FILLER OPENING	EA	1
16	5	PFFZZ	2815-01-215-1705	3012297	15434	COVER,ENGINE	EA	1
16	6	PAOZZ	2815-01-146-1092	3008595	15434	BREATHER	EA	1
16	7	PFFZZ	2815-01-142-1732	3006183	15434	COVER,ENGINE	EA	1
16	8	PAFZZ	5330-00-861-8592	3017750	15434	GASKET PART OF KT P/N 3011472,3801397	EA	3
16	9	PAFZZ	5330-01-145-3985	3044514	15434	GASKET PART OF KIT P/N 3011472,3801397	EA	3
						END OF FIGURE		

Current part is item (9) on diagram. Available at www.oshkoshequipment.com